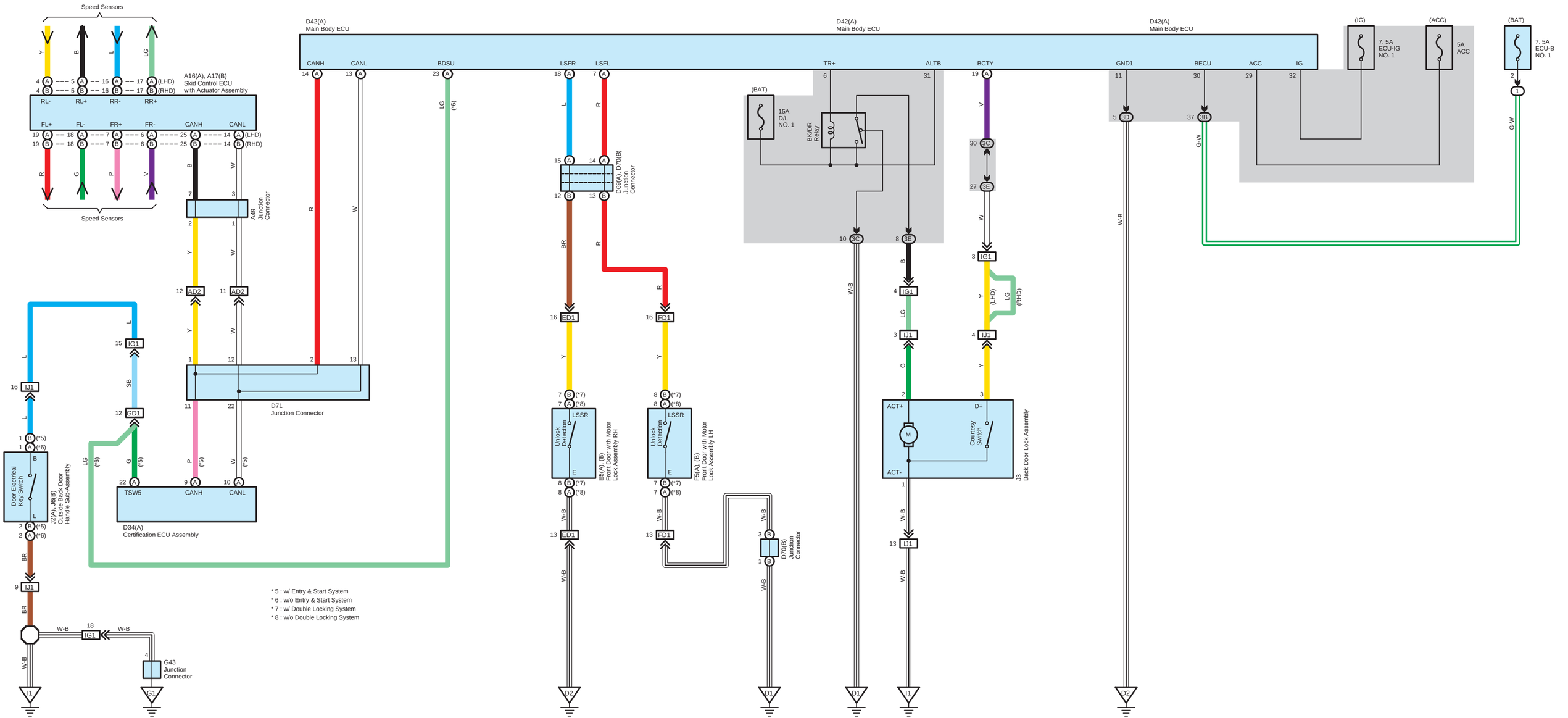
Speed Sensors
A16(A), A17(B)
Skid Control ECU
with Actuator Assembly
RL-
RL+
RR-
RR+
FL+
FL-
FR+
FR-
CANH
CANL
(LHD)
(RHD)
A49
Junction
Connector
AD2
D71
Junction Connector
IG1
IJ1
GD1
TSW5
D34(A)
Certification ECU Assembly
Door Electrical
Key Switch
J2(A), J6(B)
Outside Back Door
Handle Sub-Assembly
G43
Junction
Connector
D42(A)
Main Body ECU
CANH
CANL
BDSU
LSFR
LSFL
TR+
ALTB
BCTY
GND1
BECU
ACC
IG
(BAT)
15A
D/L
NO. 1
BK/DR
Relay
D68(A), D70(B)
Junction
Connector
ED1
FD1
Unlock
Detection
LSSR
E5(A), (B)
Front Door with Motor
Lock Assembly RH
E5(A), (B)
Front Door with Motor
Lock Assembly LH
D70(B)
Junction
Connector
ACT+
ACT-
M
Courtesy
Switch
D+
J3
Back Door Lock Assembly
(IG)
(ACC)
7. 5A
ECU-IG
NO. 1
5A
ACC
7. 5A
ECU-B
NO. 1
I1
G1
D1
D2
* 5 : w/ Entry & Start System
* 6 : w/o Entry & Start System
* 7 : w/ Double Locking System
* 8 : w/o Double Locking System